SFIC Padlocks

FLEX HARDWARE

Product Info

Product Code:
FP21-SFIC-772L
FP21-SFIC-782L

Finishes:
Satin Chrome - 626



NOT TO SCALE
DIMENTIONS: INCHES (MM)

A Closer Look

- Body made of solid forged brass
- Shackle made from stainless steel
- Inner components made of non-corrosive materials
- Precision locking mechanism with additional tampering protection
- Security for items/goods of medium value or where there is an average risk of theft
- Ideal for severe weather conditions (e.g., in sea and port areas, for securing vehicles and boats in outdoor use)
- For securing doors, gates, lockers, tool boxes, cellar windows, sheds, switch boxes, cupboards, etc.

Dimentions

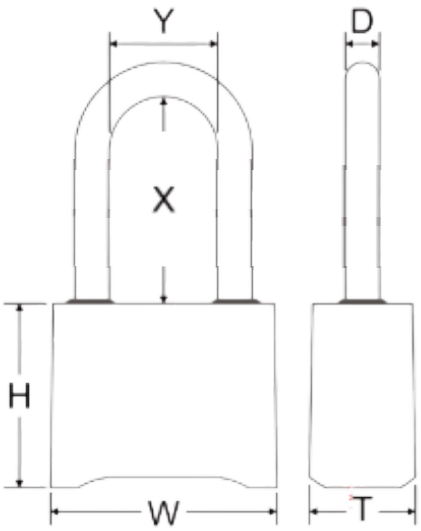

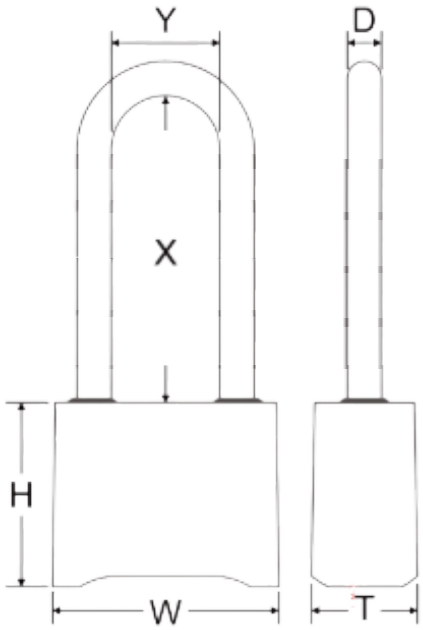

Item #	Dimention (MM)					
	Lock Body			Shackle		
	W	H	T	D	X	Y
FP21-SFIC-772L	45	56	22	7.93	50	20
FP21-SFIC-782L	45	56	22	7.93	102	20