Conventional Cylinder (K.I.K)

FLEX HARDWARE

Product Info

Product Code:
SC1-CYL-KD
SC4-CYL-KD
WE-CYL-KD

Finishes:
Satin Chrome - 626 / US26D



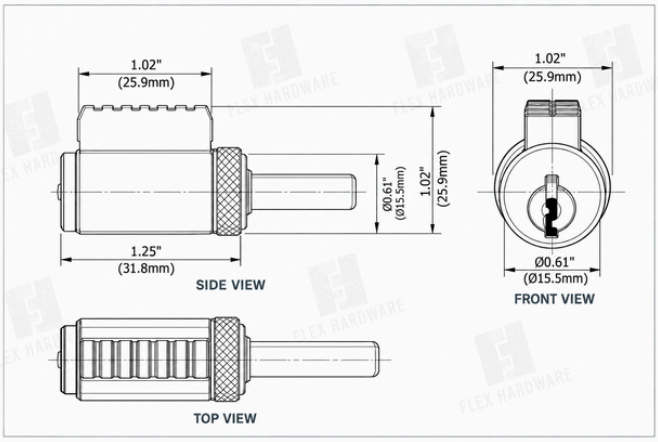

A Closer Look

- Keyed 5-pin drilled for 6.
- Comes with two keys.
- Works with Most Grade 1 and 2 Knob Locksets, Lever Locksets and Deadbolts